BLE-CC41-A Bluetooth Module

SPECIFICATION

1. Overview

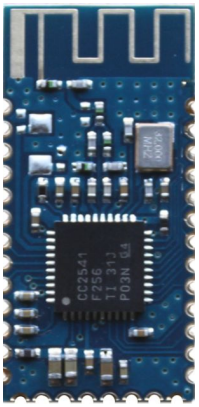

BLE-CC41-A is a next-generation, class 2, Bluetooth 4.0 module. Support the AT command, the user can according to need to change the baud rate of serial port, name of equipment, matching parameters such as password, use agile.BLE-CC41-A is a highly integrated and sophisticated Bluetooth module, containing all the necessary elements .Therefore BLE-CC41-A provides an ideal solution for developers who want to integrate Bluetooth wireless technology into their designs with limited knowledge of Bluetooth and RF technologies.

BLE-CC41-A module is testing and verification services and excellent developer support, OEMs and designers ensure that their products reach the market rapidly and cost-efficiently in relation to time and resources. Bolutek has extensive in-house knowledge of both software and hardware offering customers a single point of contact to all Bluetooth related issues.

2. Feature

Bluetooth protocol: Bluetooth Specification V4.0 BLE, send and receive no byte limit, open environment and iphone 4 s can achieve 110 meters extreme distance communication.
Based on TI CC2541 chipset
Bluetooth class 2
Industrial level SPP Bluetooth module
Integrated chip antenna
Size: 26.7 x 13 x 2 mm
Industrial temperature range from -40℃ to +85℃
Support for on-board applications
Operating frequency: 2.4 GHz ISM band
Modulation method: GFSK (Gaussian Frequency Shift Keying)
Acuity: - 84 DBM or less BER at 0.1%

Transfer rate: Asynchronous: 6 KBPS Synchronous: KBPS
Security features: Authentication and encryption
Support services: Central and Peripheral UUID FFE0, FFE1
Power consumption: automatic sleep mode, the standby current 400 ~ 1.5 mA, transfer 8.5 mA.
Power supply: + 3.3 VDC 50 ma
RoHS BQB compliant

3. Application Fields

Cable replacement
Point-of-sales systems
Barcode readers and pay terminals
Telemetry and machine-to-machine devices
Logistics and transportation systems
Automotive inspection and measurement systems
Medical systems
Fitness and sports telemetry devices
PDA and other portable terminals
PCs and laptop
OBD

4. Physical Characteristics

Operating Frequency Band	2.4GHz ISM band
Bluetooth Specification	BLE4.0
Output Power Class	Class 2
Operating Voltage	3.3V
Host Interface	UART
Dimension	27mm (L) x 13 (W) mm x 2mm (H)

5. Electrical Characteristics

Absolute Maximum Ratings		
Rating	**Min**	**Max**
Storage temperature	-40℃	+150℃
Supply voltage: VBAT	-0.4V	5.6V
Other terminal voltages	VSS-0.4V	VDD+0.4V

Recommended Operating Conditions		
Operating Condition	**Min**	**Max**
Operating temperature range	-40℃	+150℃
Guaranteed RF performance range[(a)]	-40℃	+150℃

Supply voltage: VBAT	2.2V	4.2V[(b)]

6. Application Circuit Diagram

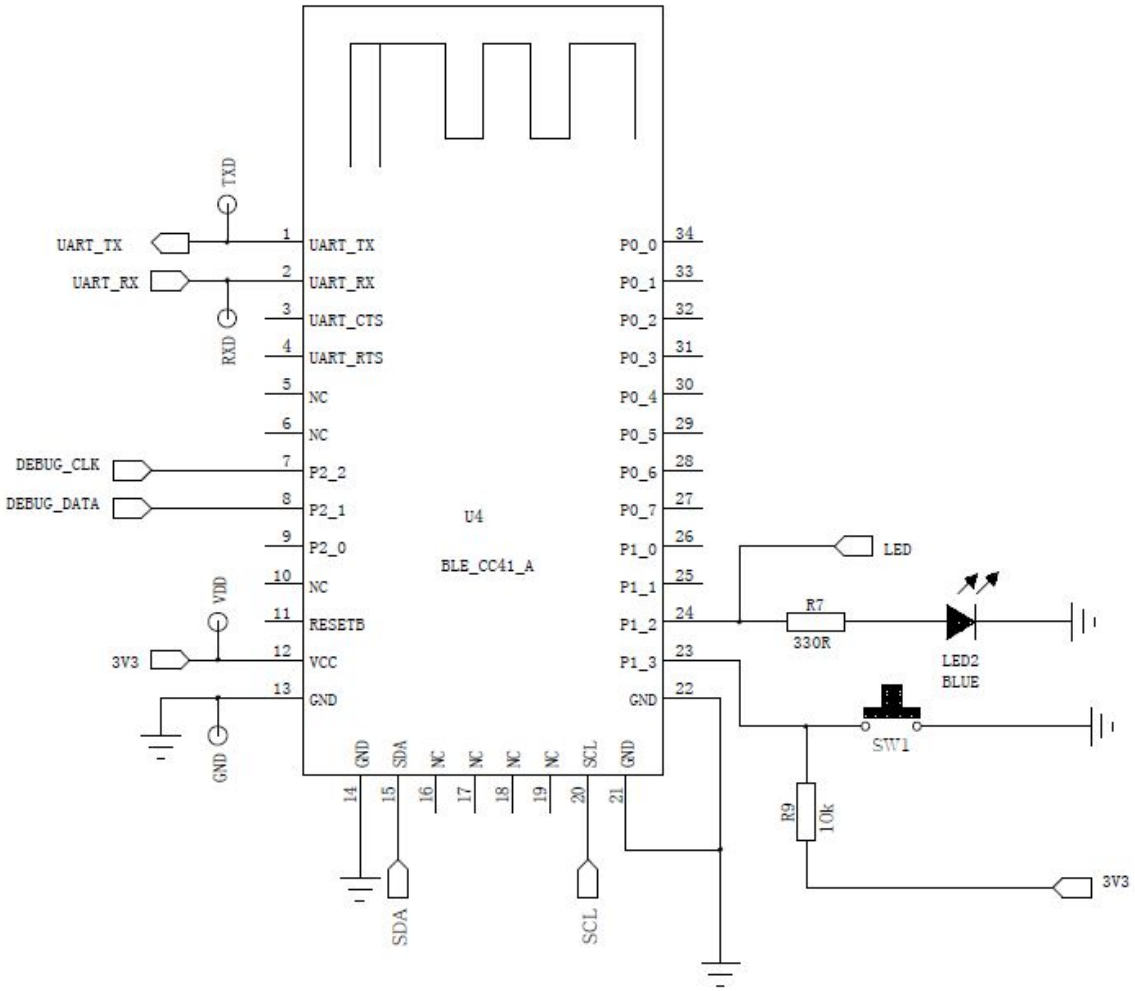

Note: This application circuit for the Bluetooth serial port circuitry, such as the need for other application, please contacts Bolutek.

7 .Pin Configurations

PIN NO.	NAME	FUNCTION
1	UART-TX	UART Data Output
2	UART-RX	UART Data Input
3	UART-CTS	UART Clear To Send Active Low
4	UART-RTS	UART Request To Send Active Low
5	NC	NC
6	NC	NC
7	P2_2	Debug the clock

8	P2_1	Debug the data
9	P2_0	Programmable Input/Output Line
10	NC	NC
11	RESETB	Reset if low Input debounced so must below for>5ms to cause a reset
12	VCC	+3.3V Supply
13	GND	Ground
14	GND	Ground
15	SDA	Data port
16	NC	NC
17	NC	NC
18	NC	NC
19	NC	NC
20	SDL	Clock port
21	GND	Ground
22	GND	Ground
23	P1_3	SW1 system key, see Other configuration
24	P1_2	State instructions LED, see Other configuration
25	P1_1	Programmable Input/Output Line
26	P1_0	Programmable Input/Output Line
27	P0_7	Programmable Input/Output Line
28	P0_6	Programmable Input/Output Line
29	P0_5	Programmable Input/Output Line
30	P0_4	Programmable Input/Output Line
31	P0_3	Programmable Input/Output Line
32	P0_2	Programmable Input/Output Line
33	P0_1	Programmable Input/Output Line
34	P0_0	Programmable Input/Output Line

8. Contour Dimension

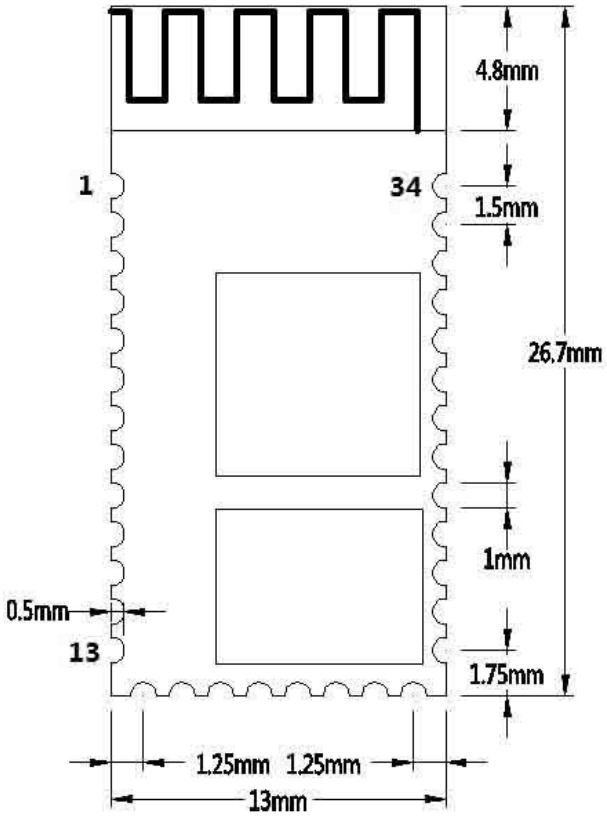

9. Other configuration

State Instructions LED: P1_2

Model	LED Display	Status
Slave	Even slow flash (800ms-on,800ms-off)	Waiting for matching
	Long bright	connection

Module dormancy set

Is only meaningful in from dormancy mode module, from the mode via a serial port to send "AT + SLEEP", if no accident, the module will return "OK" and enter a dormant state, this state to be found and connection status.

Wake up the module Settings

There are two ways:

Method one: you can send the length of the string is greater than or equal to 80 to activate the module. Send the activated string cannot contain the AT command, success after WAKE up, a serial port will output "+ WAKE OK" string.
Method 2: short press the system button SW1.

System key SW1(P1_3)

P1_3 for input pin, short press control, can realize the following functions:
1, the module is in a state of dormancy:
Module will be awakened to the normal state, the success after WAKE up, a serial port will output "+ WAKE OK" string.
2, the module is in a state of connection:
Disconnected module will initiate the request.

10.Layout Announcements

1, BLE-CC41-A bluetooth module serial level should be 3.3 V, if the connection and 5V level system need to increase the level conversion chip.
2, Bluetooth signal is highly affected by the surrounding,such as trees, metal, wall can have certain absorption on the bluetooth signal or block, so the installation is not recommended in the metal case.
3, Due to metal will weaken the function of antenna, it is suggested that Lay in the module board, don't lay GND and a line under the antenna module, it is best to hollow out.